UV-TrackMaster

EN

OPERATING MANUAL
HAND-HELD UV-A LAMP

TROTEC
AT WORK.

TRT-BA-UV-TRACKMASTER-TC-002-EN

Table of contents

Notes regarding the operating manual 1
Information about the device 2
Technical data 2
Safety 3
Transport and storage 4
Operation 5
Maintenance and repair 6
Disposal 6
Declaration of conformity 6

Notes regarding the operating manual

Symbols

Danger!
Warns of a hazard which can lead to injuries.

Danger from UV radiation!
Warns of a hazard due to UV radiation. The device generates UV-A radiation. Wear your personal protective equipment when using the device.

Hazardous electric voltage!
Warns of a hazard resulting from electric voltage which can lead to injuries.

Caution!
Warns of a hazard which can lead to damage to property.

Wear safety glasses
Indicates the necessity to wear UV protection glasses.

The current version of the operating manual can be found at: www.trotec.de

Legal notice

This release replaces all previous versions. No part of this publication may be reproduced without written permission from TROTEC®. The same applies for electronically processing, duplicating or spreading the publication. Subject to technical changes. All rights reserved. Trademarks are used without guarantee that they may be used freely and primarily following the spelling of the manufacturer. Product names are registered.
Changes to construction in the interests of constant improvements to the product, as well as changes to the shape and colour are reserved.
The scope of delivery may vary from product images. This document was created with all due care. TROTEC® accepts no liability whatsoever for possible mistakes or omissions.
The only party responsible for determining measured results to be valid, drawing conclusions and deriving actions is the user! TROTEC® accepts no claims of warranty for the correctness of the determined measured values or measured results. Further, TROTEC® accepts no liability whatsoever for possible mistakes or damage which have been caused by utilising the determined measured results. © TROTEC®

Information about the device

Description of the device

The UV-Trackmaster generates UV-A light in the 365 nm range. Possible applications of the UV-Trackmaster are:

- checking for cracks or fissures using fluorescent testing agents.
- leak detection with fluorescent liquids.
- localization of UV active substances.

Moreover, the UV-Trackmaster comes with a torch function for a better orientation in poorly lit surroundings.

Device depiction

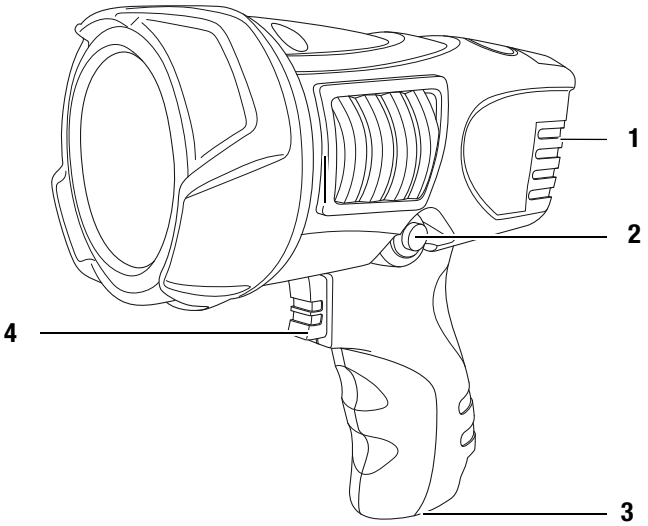

No.	Operating element
1	Battery compartment
2	Torch button
3	Connection for the charger
4	UV lamp button

Technical data

Model:	UV-TrackMaster
Weight incl. batteries:	780 g
Dimensions (H x W x D):	169 mm x 171 mm x 90 mm
Power:	15 W
Power supply:	4 NiMH baby cells, 1.2 V, 4000 mAh
External power adapter:	110 - 240 V 800 mAh
Light source:	3 x UV LED
Wavelength UV-A light:	365 ±5 nm
UV output at 40 cm:	>200 W/m^2
Field of illumination at 38 cm:	140 mm
Share of white light in UV:	<20 lux
Filter cover:	borosilicate
Operating temperature:	10 to 30 °C
Storage temperature:	10 to 30 °C
Safety shutdown:	70 °C
Type of protection:	IP 53
Torch:	>5000 lux
Risk class (according to DGZfP/BGFE EM6) [German Society for Non-Destructive Testing and institution for statutory accident insurance and prevention in the precision engineering and electrical industry]	3

Scope of delivery

- 1 x UV-TrackMaster
- 4 x NiMH 4000 mA baby cell type batteries
- 1 x Case
- 1 x Charger/power adapter combination (for charging the batteries in the device and/or for temporary mains operation while simultaneously charging the batteries)
- 1 x Getting started guide

Safety

Carefully read the operating manual before using the device and keep it within reach!

- Wear UV protection glasses.
- Do not use the device in atmospheres containing oil, sulphur, chlorine or salt.
- During operation do not cover the device with cloths or the like.
- Protect the device from permanent direct sunlight.
- Do not remove any safety signs, stickers or labels from the device. Keep all safety signs, stickers and labels in legible condition.
- Observe the storage and operating conditions (see chapter Technical data).

Intended use

Only use the device for the irradiation of objects for the purpose of detecting cracks or leaks. Only use the device within the framework of the technical data.
To use the device for its intended use, only use accessories and spare parts which have been approved by TROTEC®.

Improper use

Do not use the device in potentially explosive areas. Do not use the device underwater. Never use the device on persons or animals. TROTEC® accepts no liability for damages resulting from improper use. In such a case, entitlements to a warranty are forfeited. Any unauthorised modifications, alterations or structural changes to the device are forbidden.

Personnel qualifications

People who use this device must:

- have read and understood the operating manual, especially the Safety chapter.
- wear the personal protective equipment.

Personal protective equipment

Wear safety glasses
Wear UV protection glasses when using the device.

Wear covering clothing when using the device.

Warnings and mandatory signs on the device

Keep the warnings and mandatory signs on the device clearly legible at all times.

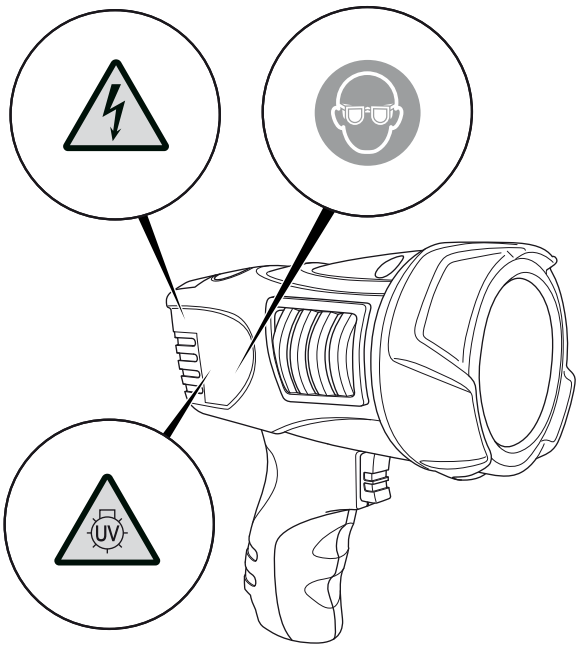

The following warnings and mandatory signs are to be found on your device:

Hazardous electric voltage!
Indicates a hazard due to electric voltage.
Never open the battery compartment when the power adapter is connected.
Disconnect the device from the power adapter before opening the battery compartment!

Danger from UV radiation!
Warns of a hazard due to UV radiation.
The device generates UV-A radiation. Wear your personal protective equipment when using the device.

Wear safety glasses
Wear UV protection glasses when using the device.

Residual risks

Hazardous electric voltage!
Never open the battery compartment when the power adapter is connected.
Disconnect the device from the power adapter before opening the battery compartment!

Danger from UV radiation!
The device generates UV-A radiation.
Wear UV protection glasses and covering clothing when using the device.

Danger!
Keep a sufficient distance away from sources of heat.

Danger!
Do not leave the packaging lying around. Children may use it as a dangerous toy.

Danger!
The device is not a toy and does not belong in the hands of children.

Danger!
Dangers can occur at the device when it is used by untrained people in an unprofessional or improper way. Observe the personnel qualifications.

Caution!
Only use the device with the batteries supplied or with batteries of the same type. Using batteries may cause damage to the device due to excess voltage.

Caution!
When drying, dyes, especially uranine, can leave residues on surfaces.
Wash the respective surfaces after the application.

Caution!
To prevent damages to the device, do not expose it to extreme temperatures, extreme humidity or moisture.

Caution!
Do not use abrasive cleaners or solvents to clean the device.

Transport and storage

Transport

Use the supplied case to transport the device.

Storage

When the device is not being used, observe the following storage conditions:

- Dry.
- Protected from dust and direct sunlight.
- with a plastic cover to protect it from invasive dust, if necessary.
- The storage temperature is the same as the range given in the chapter Technical data.
- When storing the device for an extended period of time, remove the batteries.
- Preferably use the supplied case for storage.

Operation

Battery change

Danger!
Make sure that the device is disconnected from the mains.

Caution!
Make certain that the surface of the device is dry and the device is switched off.

Caution!
Only use rechargeable batteries, see chapter Technical data.
Normal batteries are unsuitable for the device!

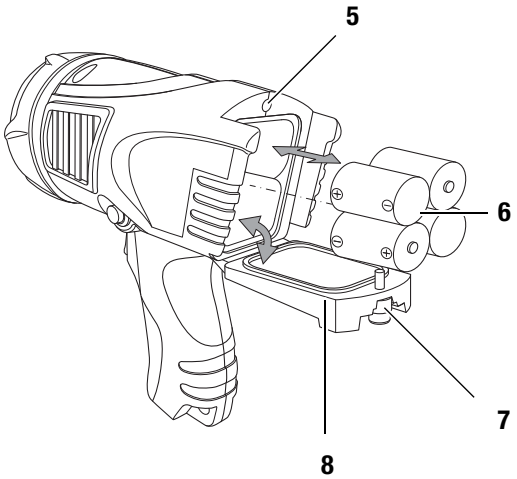

1. Remove the knurled screw (7) from the cover of the battery compartment (8).
2. If required, remove the empty batteries.
3. Insert the charged batteries with correct polarity (6).
4. Close the cover of the battery compartment (8).
5. Reattach the knurled screw (7) to the device (5).

Switching on and off

Danger from UV radiation!
The device generates UV-A radiation.
Wear covering clothing and UV protection glasses when using the device.

Wear safety glasses
Wear UV protection glasses when using the device.

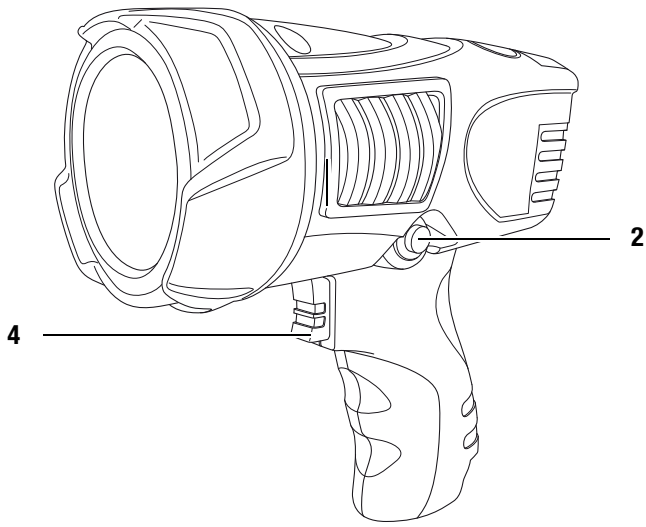

- Press button 4.
  – The UV lamp switches on.
  – The UV lamp is illuminated for as long as the button (4) is held.
- Press button 2.
  – The torch switches on.
  – The torch is lit for as long as this button (2) is held.

Maintenance and repair

Charging the batteries

The batteries need to be charged when the performance of the UV lamp or the torch lessens or the device can no longer be switched on.

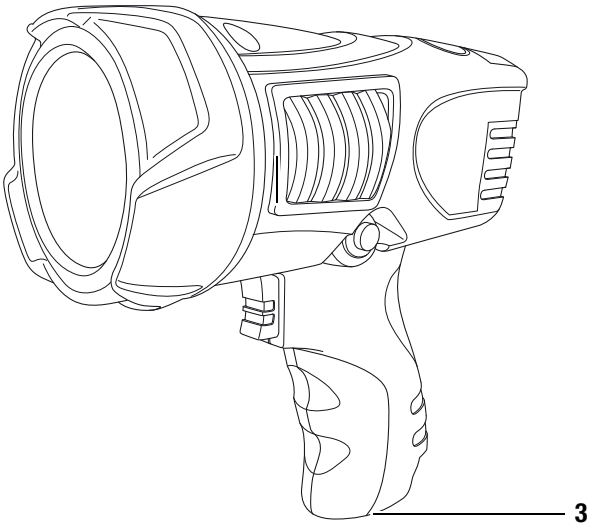

1. Connect the charger to the mains and the connection (3) within the handle of the device.
   – The batteries are being charged.
   – Optionally, the device can also be operated during charging.

Cleaning

Clean the device with a soft, damp and lint-free cloth. Ensure that no moisture enters the housing. Do not use any sprays, solvents, alcohol-based cleaning agents or abrasive cleaners. Only use clean water to moisten the cloth.

Repair

Do not modify the device. Never open the device housing or install any spare parts. For repairs or device testing, contact the manufacturer.

Disposal

In the European Union, electronic equipment must not be treated as domestic waste, but must be disposed of professionally in accordance with Directive 2002/96/EC of the European Parliament and Council of 27th January 2003 concerning old electrical and electronic equipment. At the end of its life, please dispose of this instrument in a manner appropriate to the relevant legal requirements.

Declaration of conformity

in accordance with the EC Low Voltage Directive 2006/95/EC and the EC Directive 2004/108/EC about electromagnetic compatibility.
Herewith, we declare that the hand-held UV-A lamp UV-TrackMaster was developed, constructed and produced in compliance with the named EC directives.

The CE marking is found on the rear of the device.

Manufacturer:
Trotec GmbH & Co. KG
Grebbener Straße 7
D-52525 Heinsberg

Phone: +49 2452 962-400
Fax: +49 2452 962-200
E-mail: info@trotec.com

Heinsberg, 31/03/2013

Managing Director: Detlef von der Lieck

Trotec GmbH & Co. KG

Grebbener Str. 7
D-52525 Heinsberg

+49 2452 962-0
+49 2452 962-200

info@trotec.com
www.trotec.com